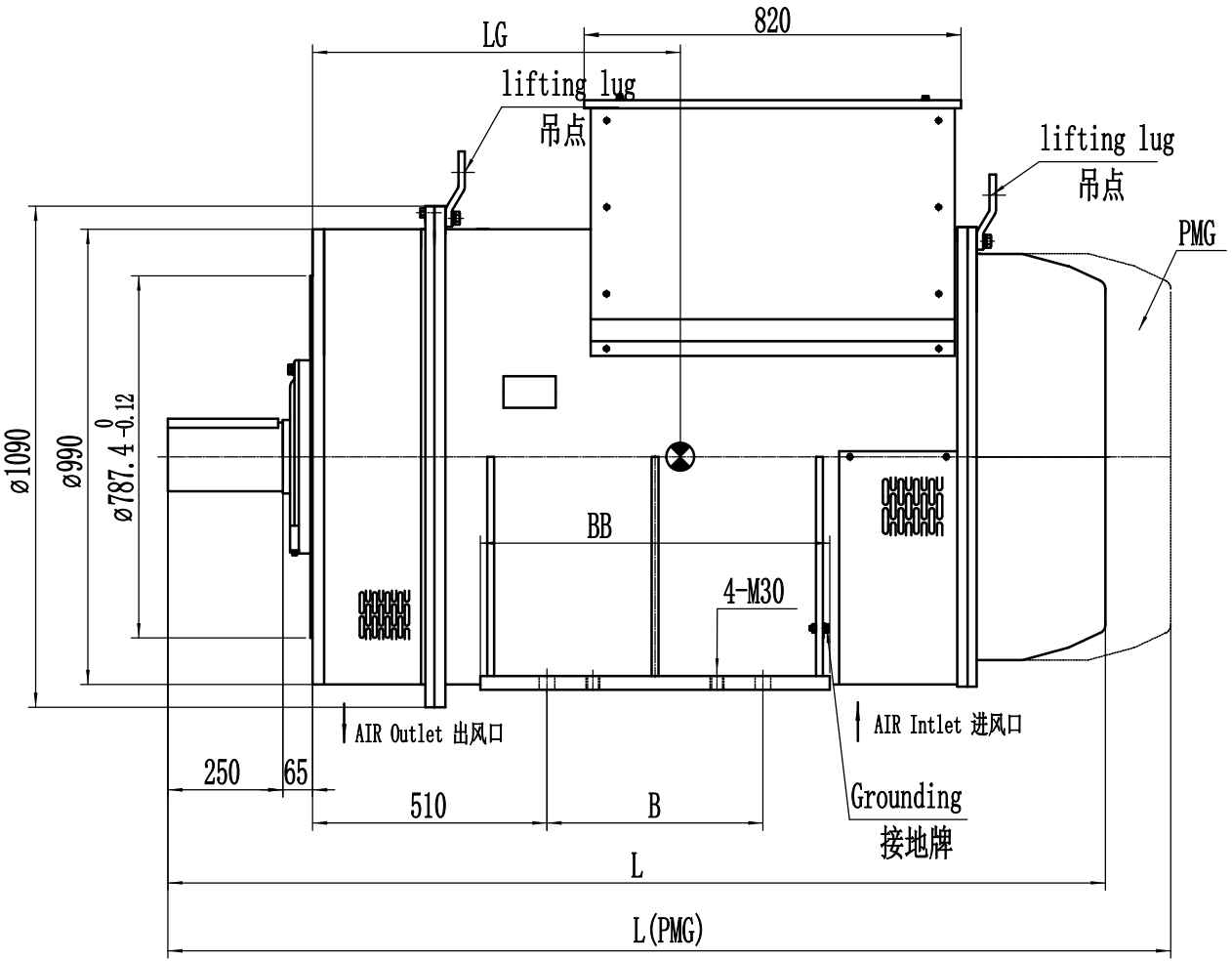

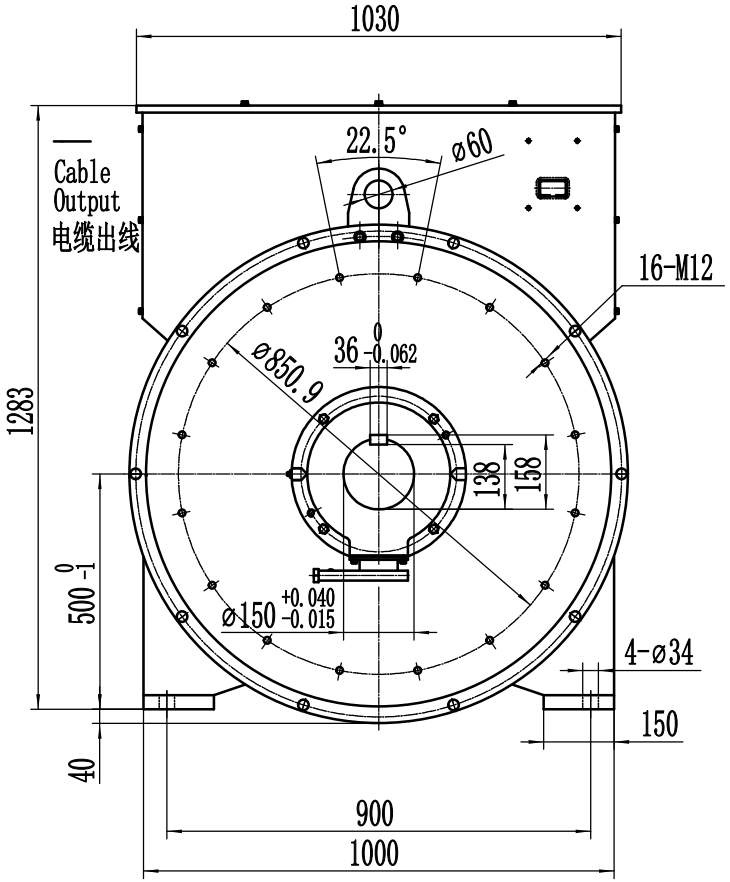

型号 (MODEL)	L	LG	B	BB	重量 (Weight)	L(PMG)	重量 (PMG)
EG500-1720N	2000	776	430	720	4410	2135	4436
EG500-1800N	2010	780	440	730	4480	2145	4506
EG500-1920N	2040	800	470	760	4630	2175	4656

⊗ =CENTER OF GRAVITY
DIMENSION IN mm
OPION TO IP21 OR IP23

DESIGNED BY	COLLATED BY	APPROVED BY	FILENAME	DATE	PROPORTION
Liuxiaolian				2021.08.04	1:8

ENGGA GENERATORS CO.LTD

EG500 Double Bearing Drawing

OYT-200-074~076